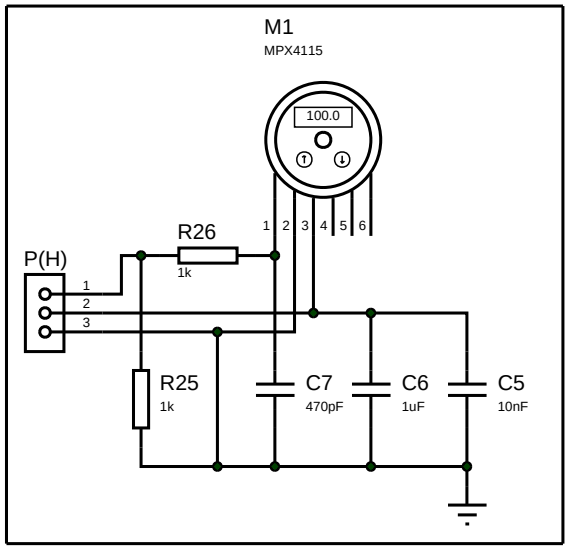
M1
MPX4115
100.0
1 2 3 4 5 6
P(H)
1
2
3
R26
1k
R25
1k
C7
470pF
C6
1uF
C5
10nF

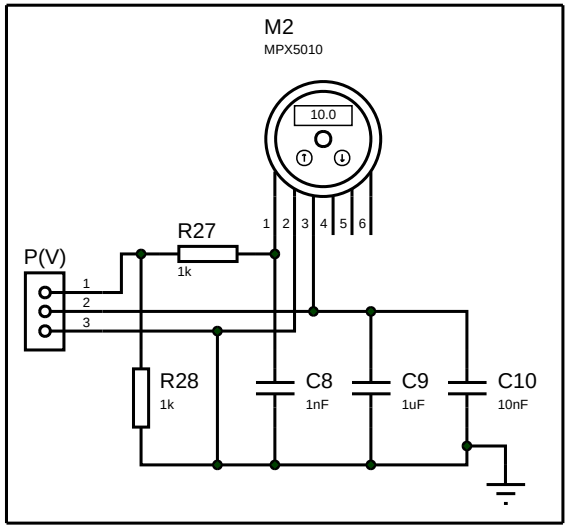
M2
MPX5010
10.0
1 2 3 4 5 6
P(V)
1
2
3
R27
1k
R28
1k
C8
1nF
C9
1uF
C10
10nF

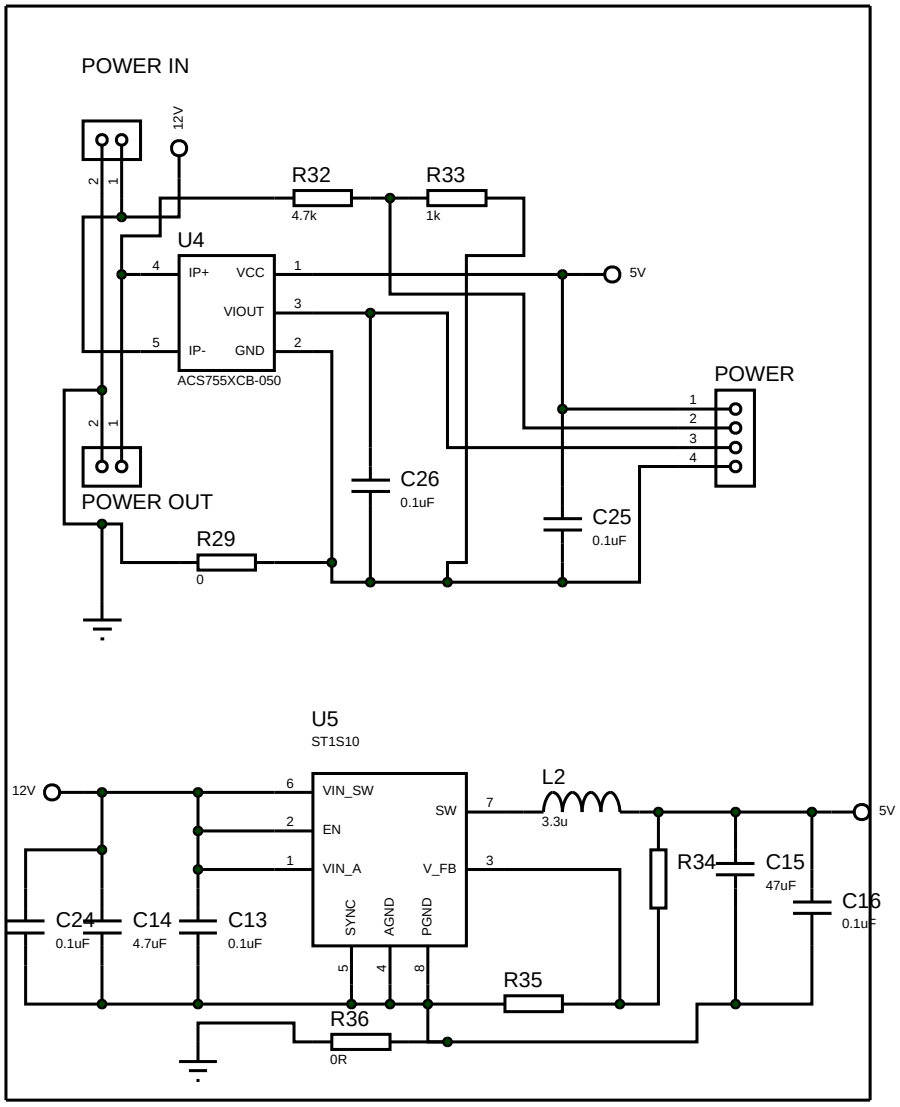
POWER IN
12V
2
1
R32
4.7k
R33
1k
U4
4
IP+
VCC
1
5V
VIOUT
3
5
IP-
GND
2
ACS755XCB-050
POWER
1
2
3
4
2
1
POWER OUT
C26
0.1uF
C25
0.1uF
R29
0
U5
ST1S10
12V
6
VIN_SW
SW
7
L2
3.3u
5V
2
EN
1
VIN_A
V_FB
3
R34
C15
47uF
C16
0.1uF
C24
0.1uF
C14
4.7uF
C13
0.1uF
SYNC
AGND
PGND
5
4
8
R35
R36
0R