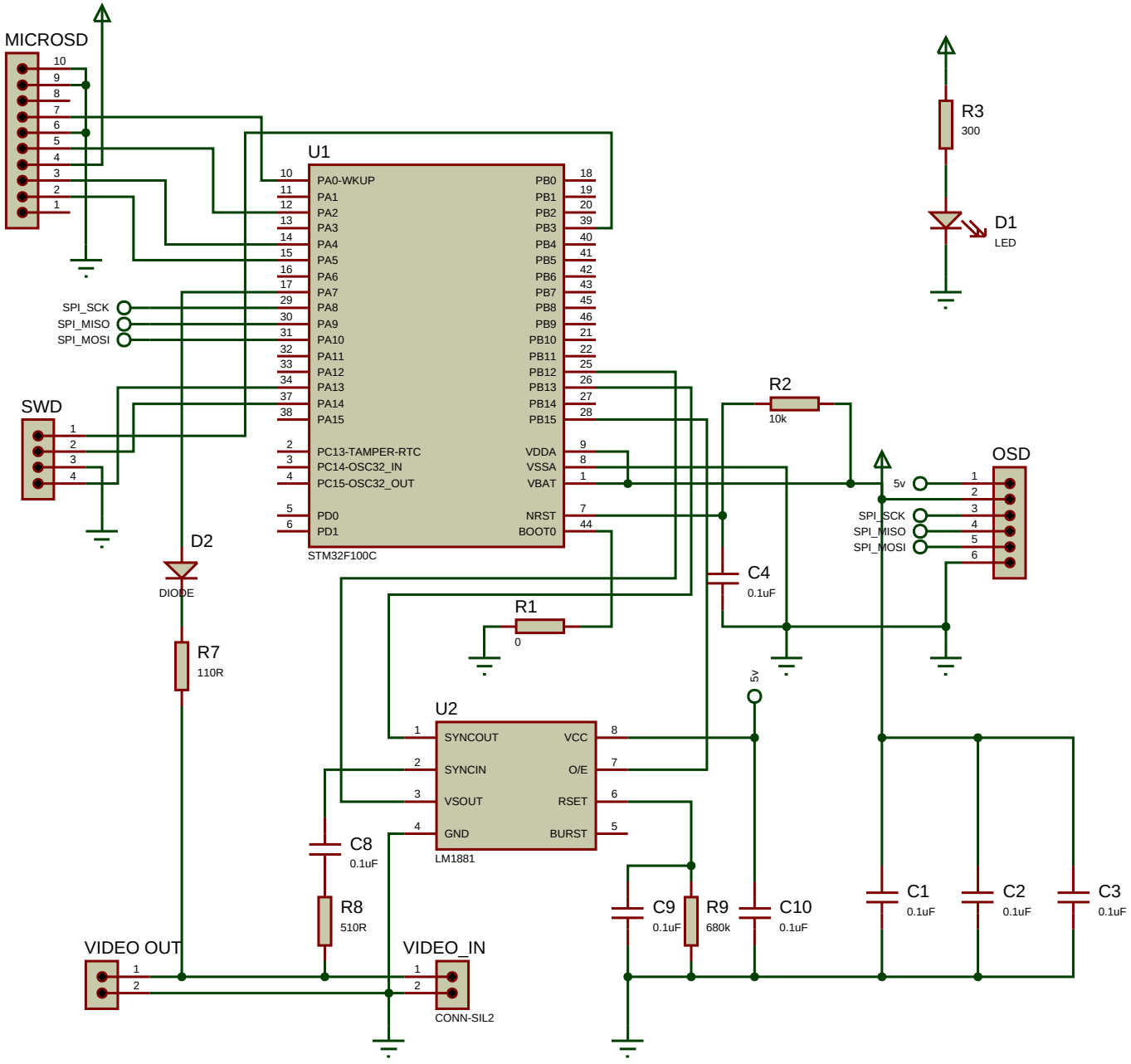
MICROSD
10
9
8
7
6
5
4
3
2
1
U1
PA0-WKUP
PA1
PA2
PA3
PA4
PA5
PA6
PA7
PA8
PA9
PA10
PA11
PA12
PA13
PA14
PA15
PC13-TAMPER-RTC
PC14-OSC32_IN
PC15-OSC32_OUT
PD0
PD1
PB0
PB1
PB2
PB3
PB4
PB5
PB6
PB7
PB8
PB9
PB10
PB11
PB12
PB13
PB14
PB15
VDDA
VSSA
VBAT
NRST
BOOT0
STM32F100C
SPI_SCK
SPI_MISO
SPI_MOSI
SWD
R3
300
D1
LED
R2
10k
OSD
5v
SPI_SCK
SPI_MISO
SPI_MOSI
D2
DIODE
R7
110R
C4
0.1uF
R1
0
5v
U2
SYNCOUT
SYNCIN
VSOUT
GND
VCC
O/E
RSET
BURST
LM1881
C8
0.1uF
R8
510R
C9
0.1uF
R9
680k
C10
0.1uF
C1
0.1uF
C2
0.1uF
C3
0.1uF
VIDEO OUT
VIDEO_IN
CONN-SIL2